TECHNICAL INSTRUCTIONS

FOR

LIMITED SERVICE CAMPAIGN C0F

EXHAUST GAS CONTROL ACTUATOR REPLACEMENT

CERTAIN 2012 MODEL YEAR PRIUS V

UPDATED JULY 23, 2012

TECHNICAL INSTRUCTION UPDATE NOTICE:

Updated 7/23/12

- **The operation flow chart has been updated (SECTION I)**

Previous versions of these Technical Instructions should be discarded.

I. OPERATION FLOW CHART

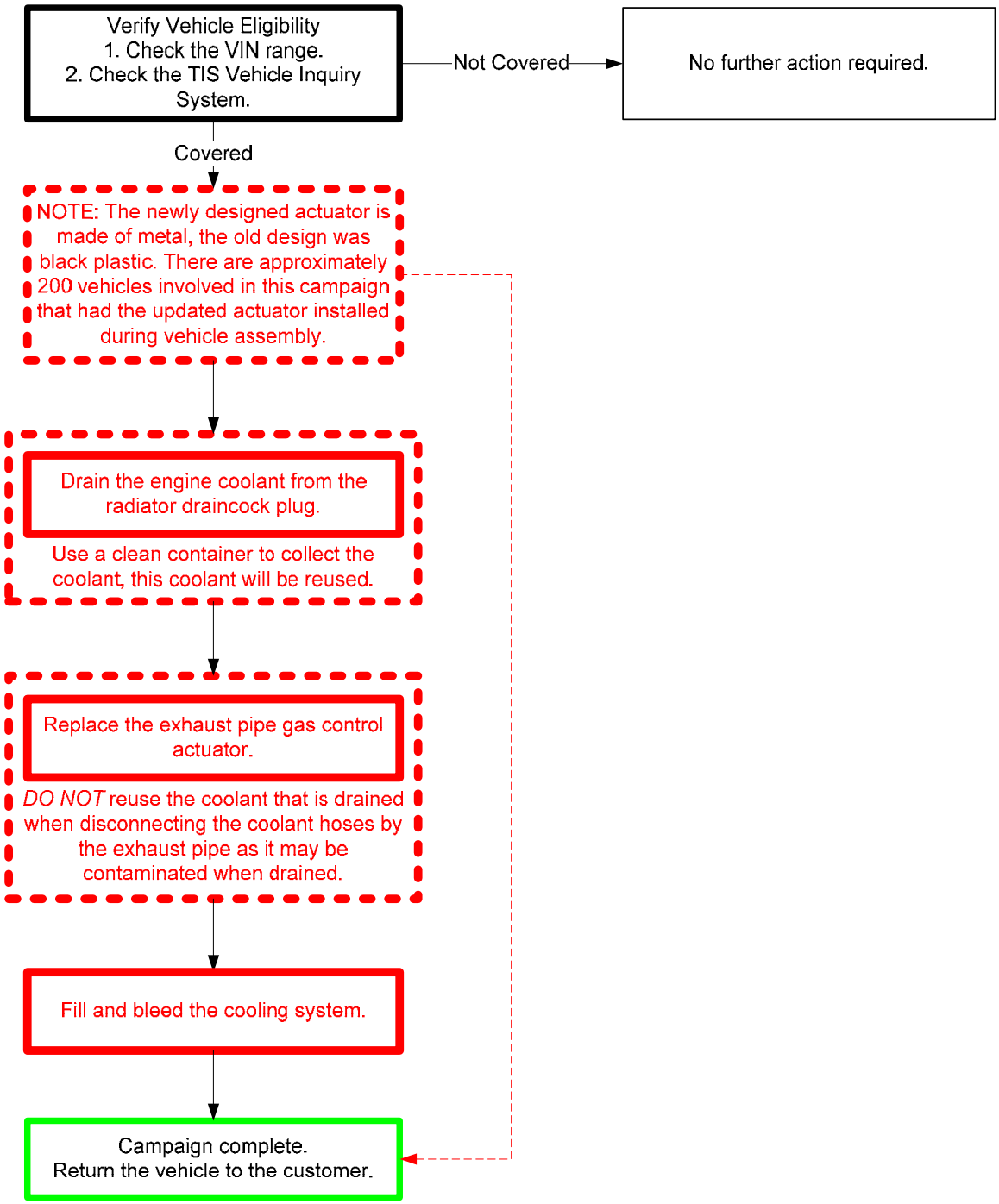

II. IDENTIFICATION OF AFFECTED VEHICLES

A. COVERED VIN RANGE

WMI	Year	VDS Range	
		VDS	Range
JTD	2012	ZN3EU	3000105-3079570

NOTE:

- Check the TIS Vehicle Inquiry System to confirm the VIN is involved in this Limited Service Campaign, and that the campaign has not already been completed prior to dealer shipment or by another dealer.
- TMS warranty will not reimburse dealers for repairs conducted on vehicles that are not affected or were completed by another dealer.

III. PREPARATION

A. PARTS

Part Number	Part Description	Quantity
16492-21050	Radiator Draincock O-Ring	1
04001-88237	Actuator Set, Exhaust Pipe Gas Control Kit*	1

*The kit above includes the following parts:

Part Number	Part Description	Quantity
17046-37050	Acuator Sub-Assy, Exhaust Pipe Gas Control	1
17146-37020	Pipe, Exhaust Bypass	1
17537-37010	Plate, Exhaust Pipe	1
17552-37020	Insulator, Exhaust Pipe Heat No. 2	1
17457-37010	Bolt (14mm)	2
90105-06335	Bolt (20mm)	3
17451-28040	Gasket, Exhaust Pipe	1
17451-23042	Gasket, Exhaust Pipe No. 2	1

B. TOOLS & EQUIPMENT

- Standard hand tools
- Clean drain bucket
- Techstream

C. SUPPLIES

Part Name	Quantity
Toyota Genuine 50/50 Pre-Diluted SLLC	Approximately 1 quart

NOTE:

- **The coolant drained from the radiator *MUST* be reused.**
- **Because some coolant will be lost when disconnecting the hoses by the exhaust pipe, a small amount of coolant will be needed.**

IV. BACKGROUND

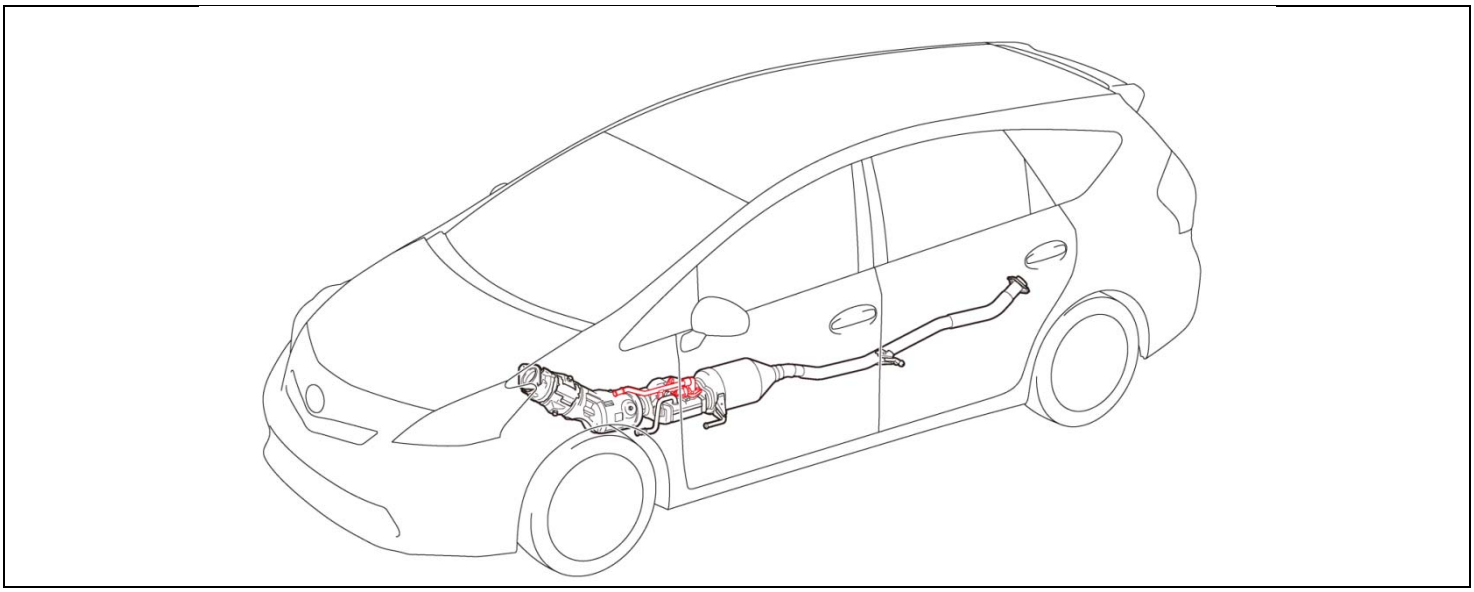

On certain 2011 and 2012 model year Highlander HV and certain 2012 model year Prius V vehicles, there is a possibility that the exhaust gas control actuator may develop a coolant leak. If a coolant leak occurs, the Water Temp Indicator Lamp* ( ), and Check Engine Lamp ( ) will illuminate.

If the above warning lamps illuminate, the driver should pull over, and contact an authorized Toyota dealer for diagnosis and repair. Continued operation of the vehicle with insufficient levels of coolant will cause the engine to overheat.

V. WORK PROCEDURE

A. COMPONENTS

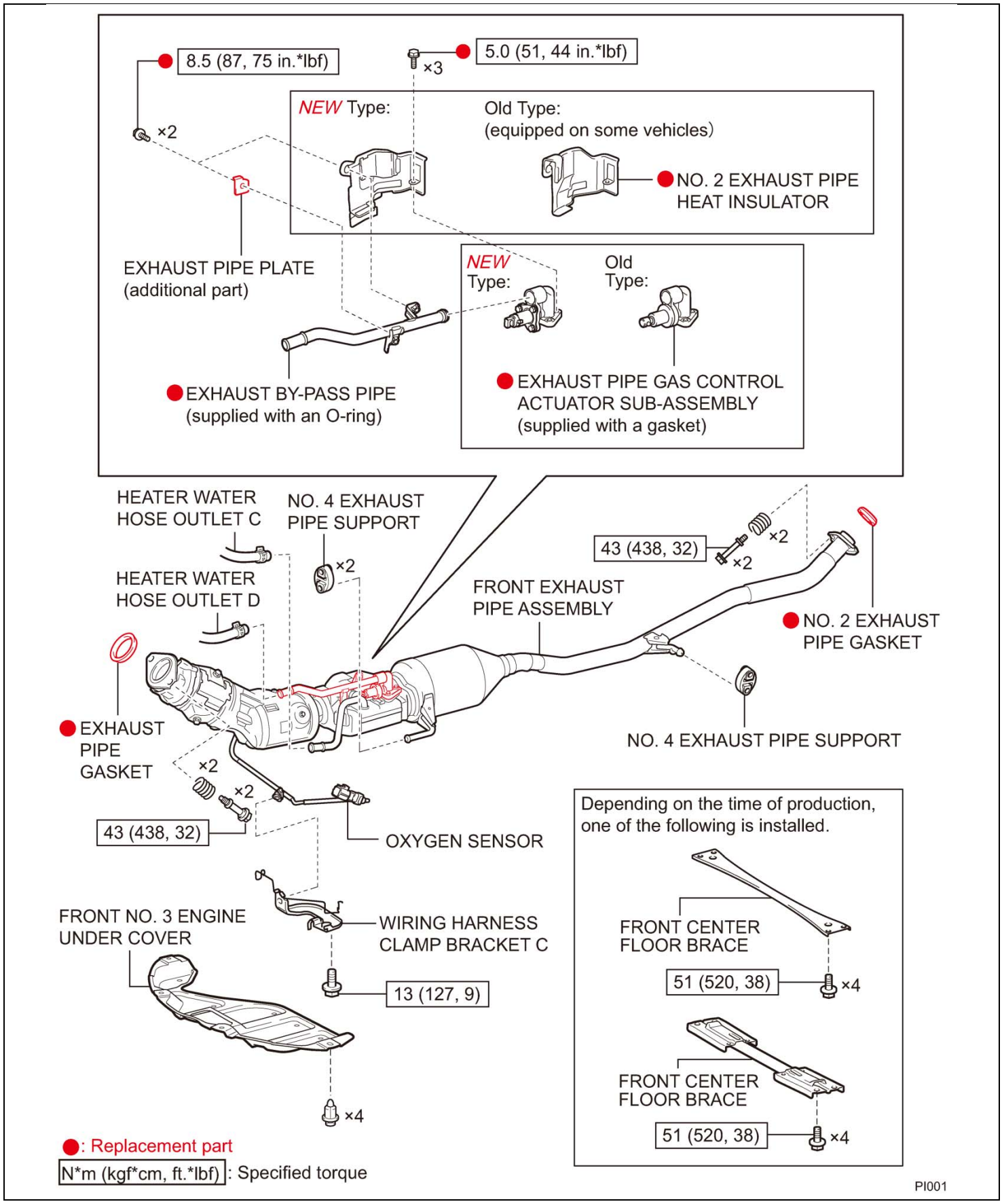

B. FRONT EXHAUST PIPE ASSEMBLY REMOVAL

1. CHECK FOR DTCs

a) Check and record any DTCs and freeze-frame data that may be present.

2. DRAIN THE ENGINE COOLANT

a) Prepare a clean container.

b) Connect a clean hose to the radiator draincock and drain the coolant into a clean container.

c) When the coolant is drained completely, replace the draincock o-ring.

STOP

- **Confirm the cooling system is sufficiently cool before beginning any work.**
- **The coolant drained from the radiator *MUST* be reused, confirm that a clean container is used when draining the coolant.**
- ***DO NOT* reuse any coolant that is drained when disconnecting the coolant hoses by the exhaust gas control actuator, this coolant may be contaminated when drained.**
- ***DO NOT* mix the coolant drained from the radiator with the coolant drained from the hoses.**

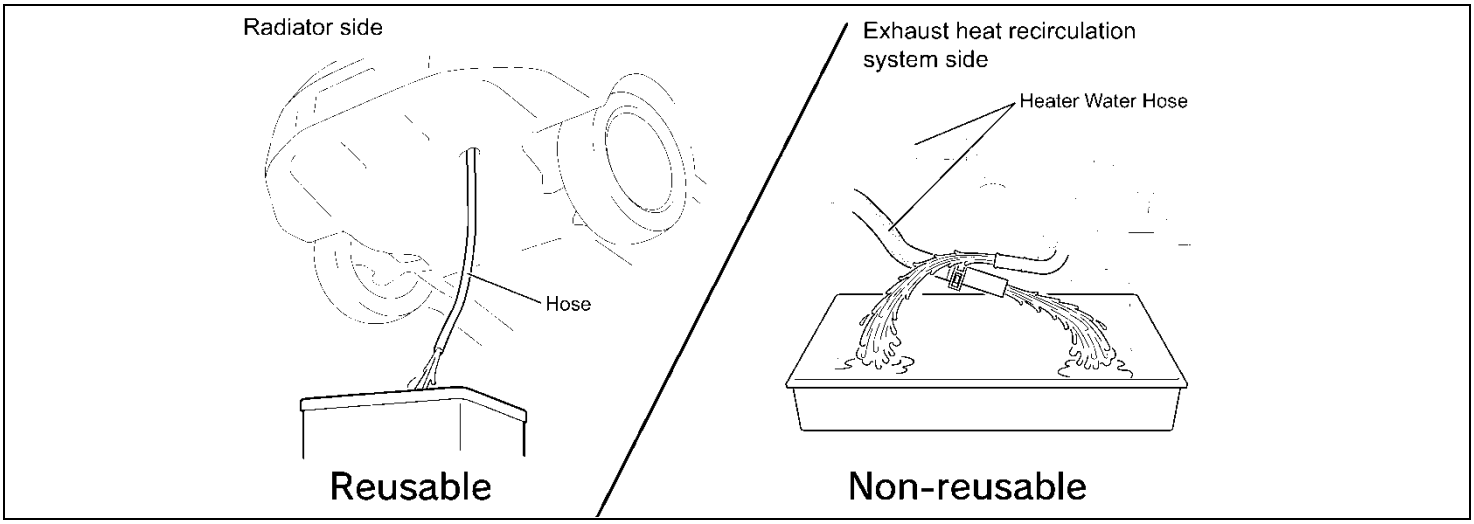

3. REMOVE THE FRONT EXHAUST PIPE ASSEMBLY

a) Refer to TIS for instructions on **front exhaust pipe assembly removal.**

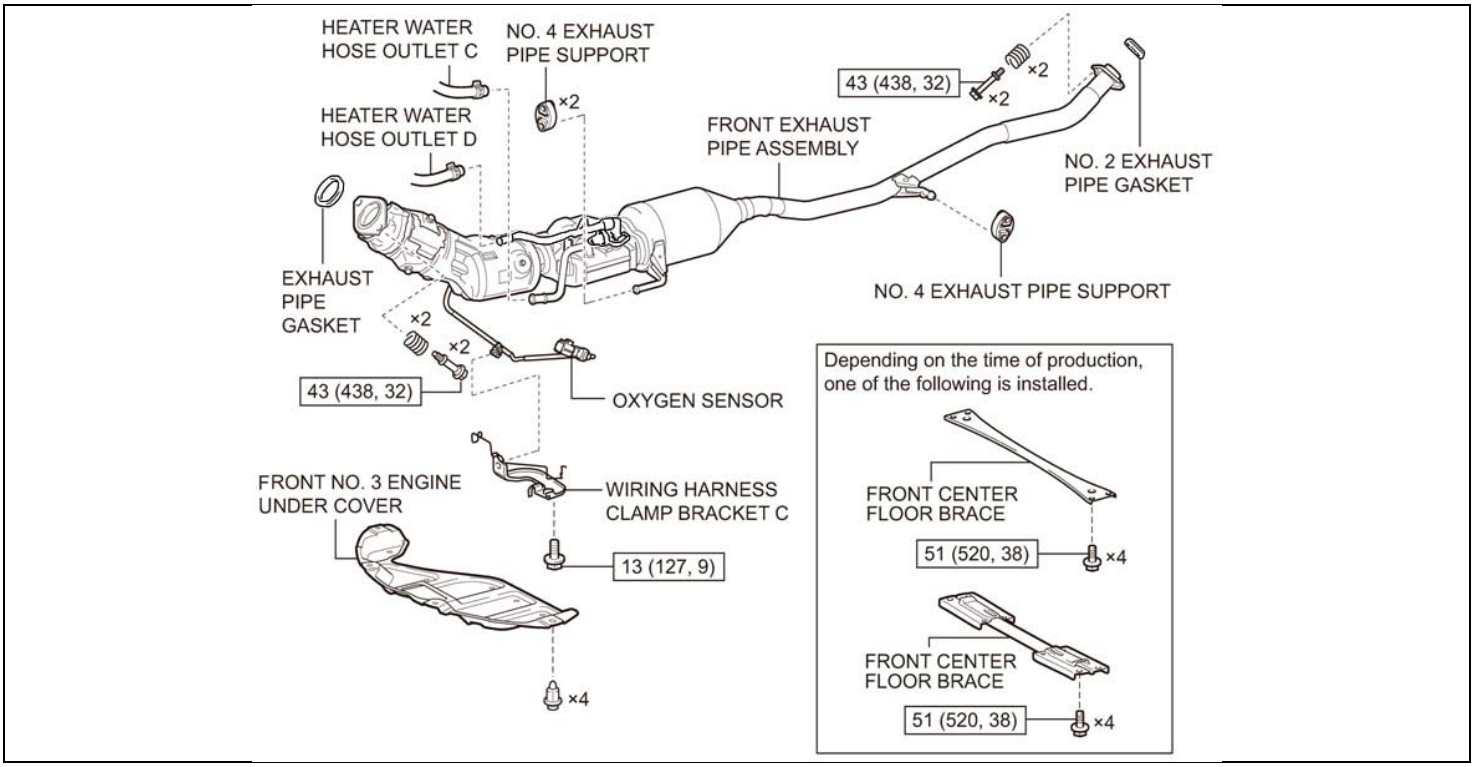

C. EXHAUST GAS CONTROL ACTUATOR REPLACEMENT

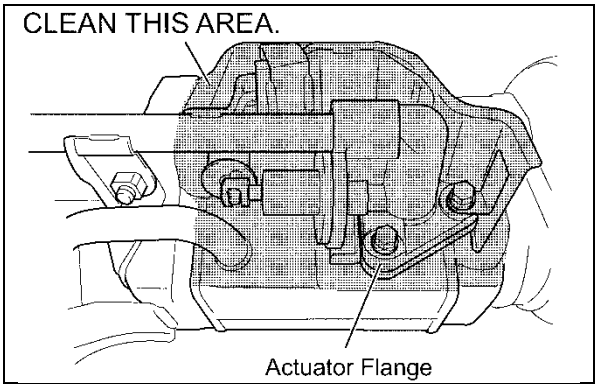

1. CLEAN THE AREA AROUND THE EXHAUST GAS CONTROL ACTUATOR SUB-ASSEMBLY

a) Clean the area shaded in the illustration to prevent foreign material from entering the cooling system.

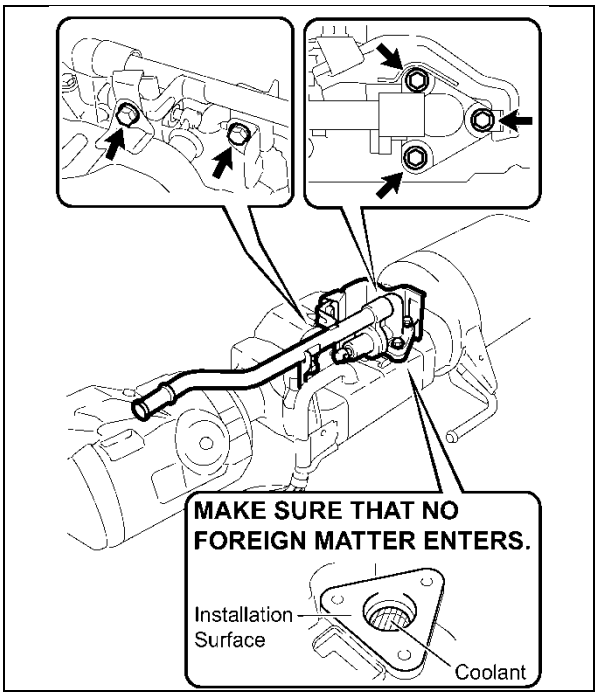

2. REMOVE THE EXHAUST GAS CONTROL ACTUATOR SUB-ASSEMBLY

a) Remove the 5 bolts then the actuator and bypass pipe.

Confirm that no foreign material enters the cooling system when the actuator is removed.

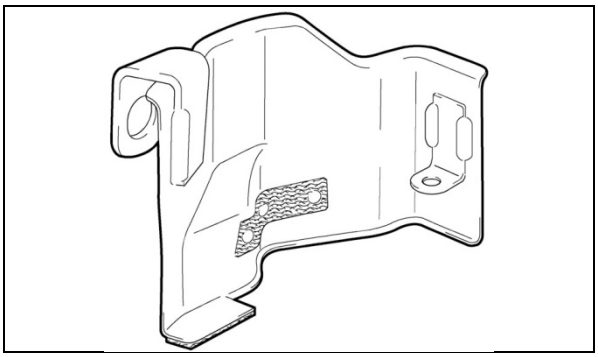

3. REMOVE THE HEAT INSULATOR

a) If an old-style heat insulator is present, remove and discard this part.

NOTE: Depending on the vehicle production date, some vehicles will be equipped with this insulator and some will not.

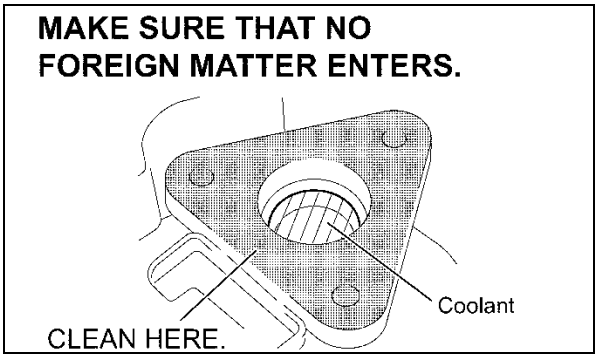

4. CLEAN THE ACTUATOR CONTACT SURFACE

a) Use a shop cloth to clean the contact surface.

NOTE: Clean from the inside of the flange toward the outside edge to prevent foreign material from entering the cooling system.

5. ADD COOLANT UP TO THE EDGE OF THE FLANGE

a) To limit the amount of air in the cooling system, add coolant.

NOTE: If a large amount of air enters the cooling system, the load on the water pump will increase.

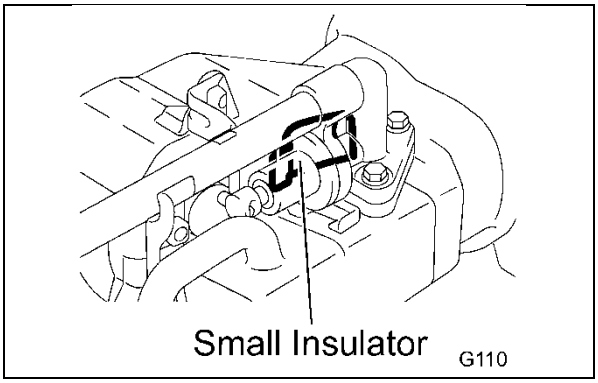

6. INSPECT FOR WELDED INSULATOR

INSPECTION RESULT	ACTION REQUIRED
Equipped with insulator	Perform **STEP 7** a) through e)
Not equipped with insulator	Perform **STEP 7** c) and d) ***ONLY***

NOTE: Depending on the date of vehicle production, some vehicles are not equipped with the welded insulator.

7. LOOSELY INSTALL THE No.2 INSULATOR

a) Tilt the welded insulator toward the actuator contact flange.

b) Install the ***NEW*** No.2 insulator behind the welded insulator.

c) Install the No.2 insulator bracket behind the exhaust pipe bracket.

NOTE: If the vehicle is not equipped with the welded insulator perform STEP 7 c) and d) *ONLY.*

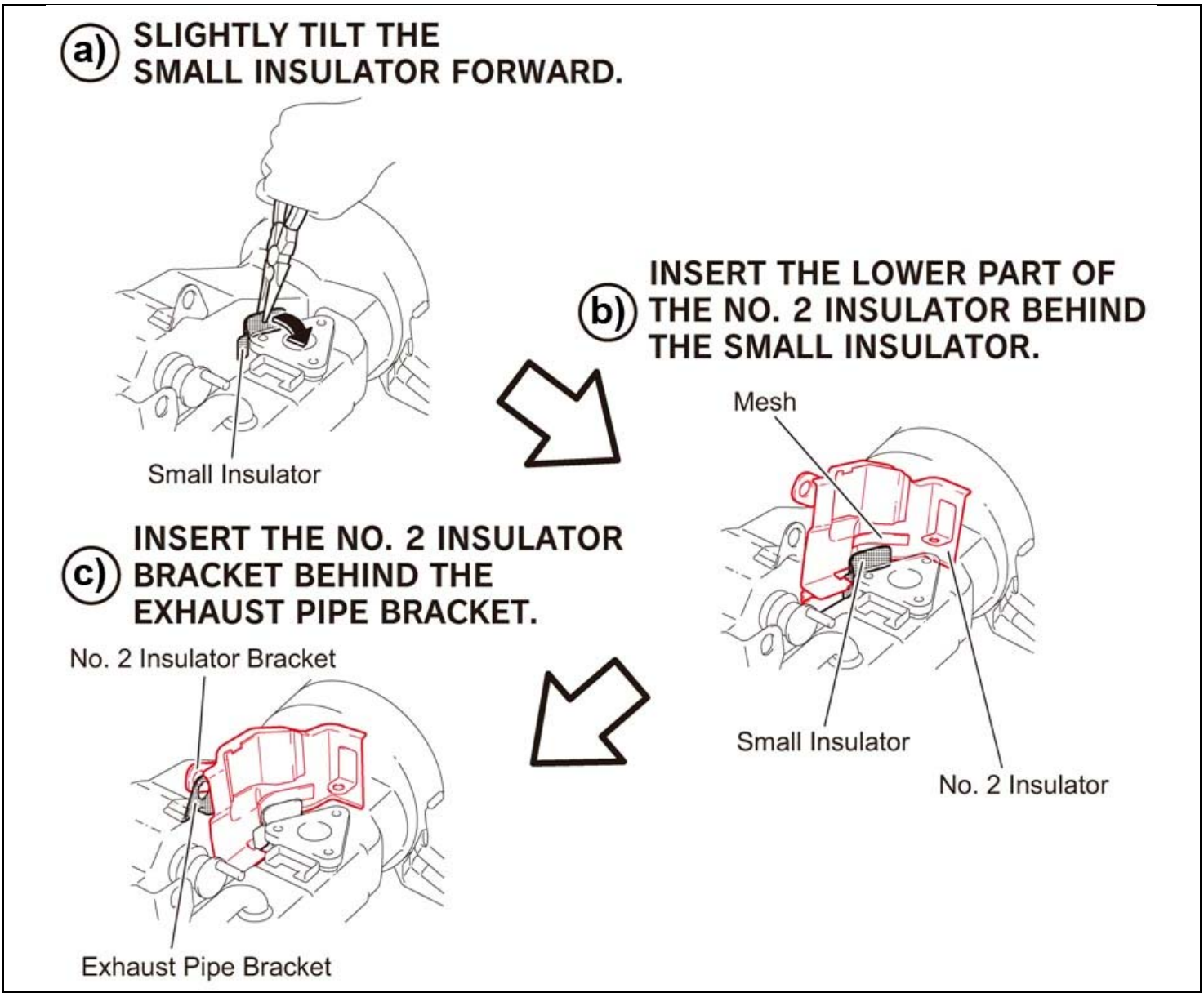

NOTE: The mesh on the new No.2 insulator is used to prevent rattle and vibration noise.

d) Confirm the new No.2 insulator is installed in the correct position.

e) Tilt the welded insulator back toward the No.2 insulator.

NOTE: If the vehicle is not equipped with the welded insulator perform STEP 7 c) and d) *ONLY.*

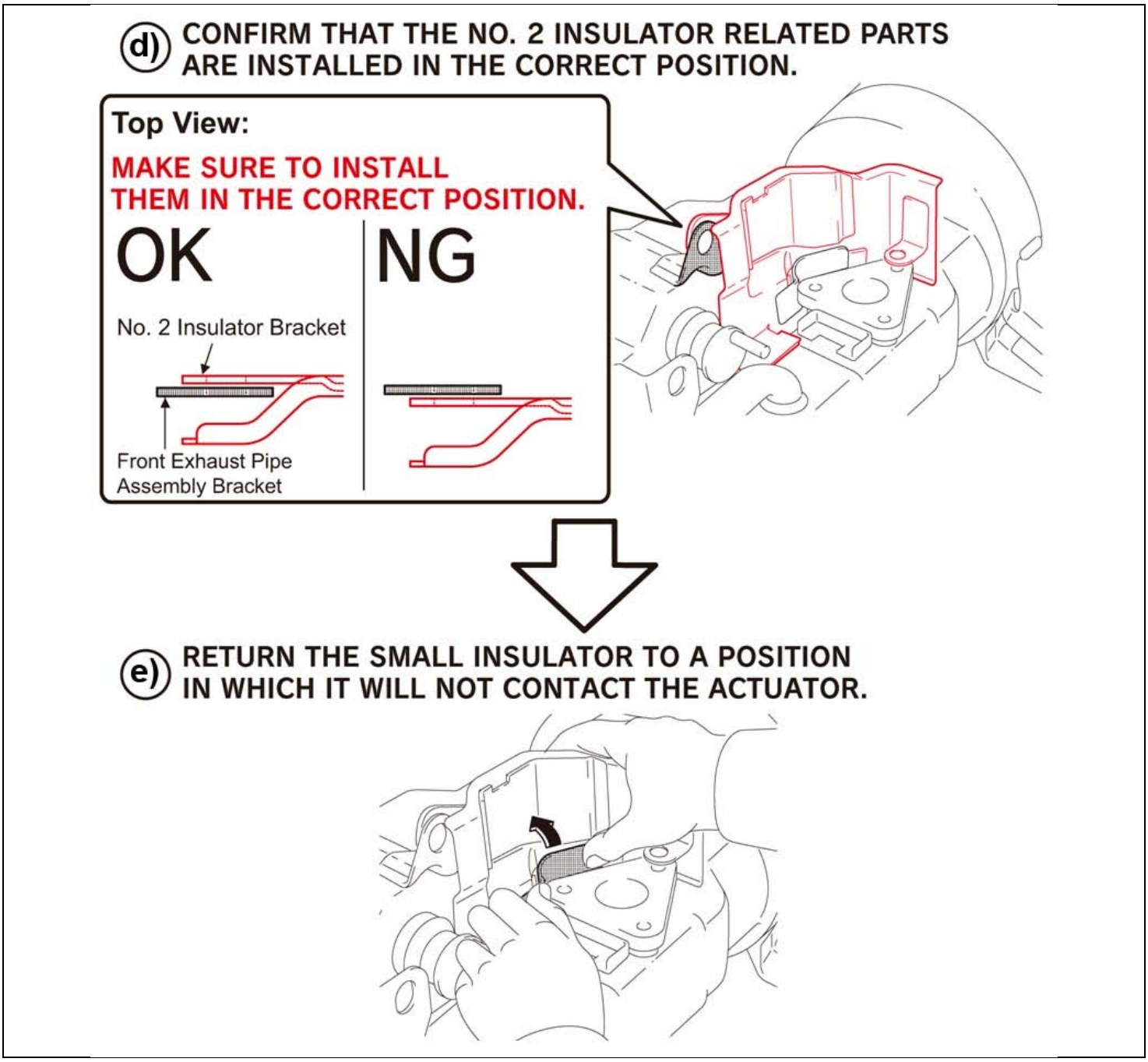

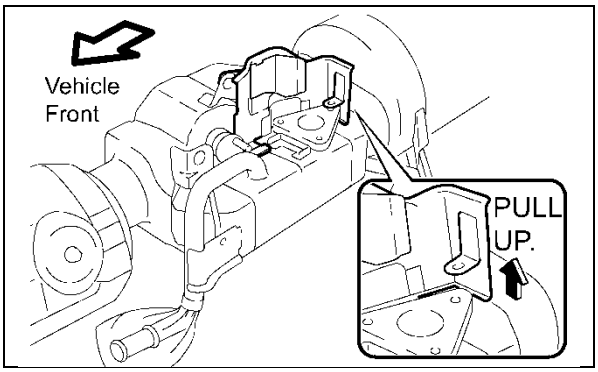

8. LOOSELY INSTALL THE EXHAUST GAS CONTROL ACTUATOR

a) Lift the rear side of the No.2 insulator to allow the actuator to be installed below the flange on the insulator.

b) Loosely install the ***NEW*** actuator, confirm the actuator is installed below the flange on the insulator and that the hook is engaged with the valve pin.

NOTE: Confirm no foreign material is present in the coolant prior to installing the actuator.

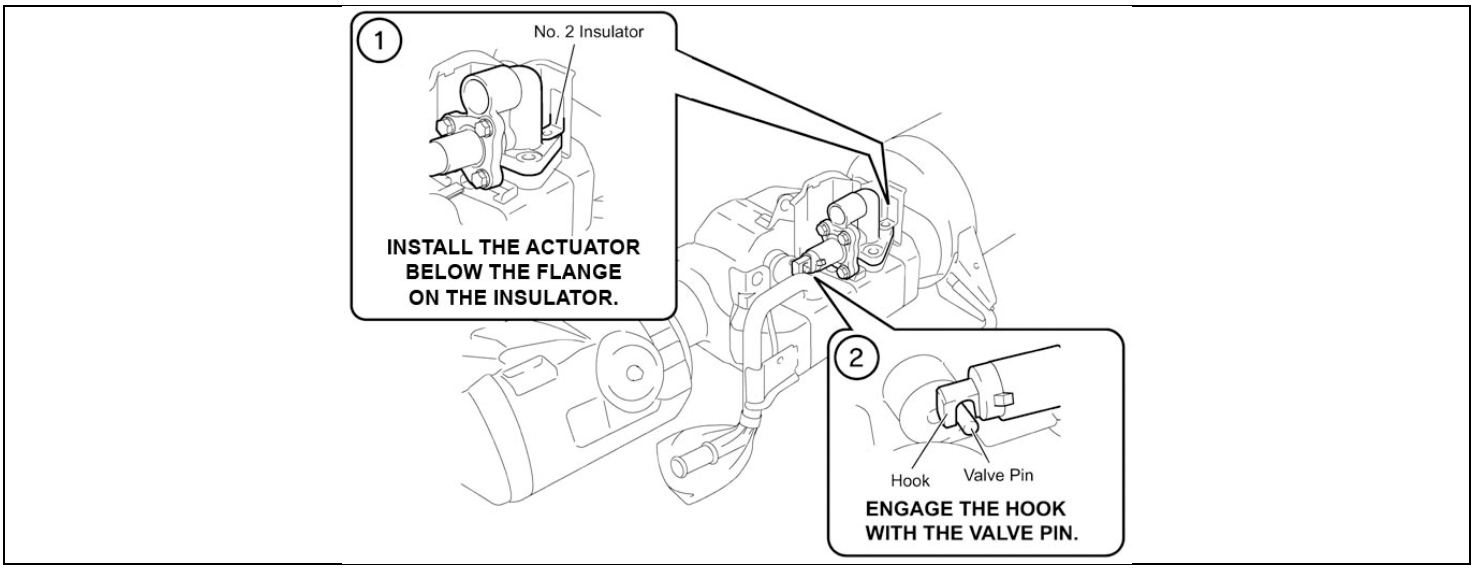

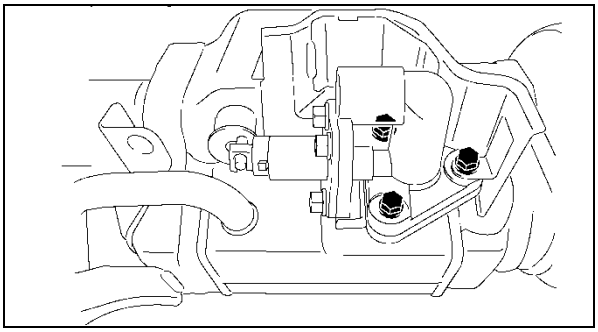

c) Loosely install the 3 ***NEW*** black bolts several threads.

NOTE: *DO NOT* tighten these bolts at this time as the actuator will need to be adjusted.

9. CONNECT THE BYPASS PIPE

a) Apply clean coolant to the o-ring on the ***NEW*** bypass pipe to ease installation.

b) Insert the bypass pipe into the actuator as far as possible.

c) Confirm the bypass pipe and No.2 insulator are positioned correctly.

NOTE:

- ***DO NOT* damage the o-ring or allow it to become contaminated before installation.**
- **Confirm the bypass pipe is installed completely, there may be a yellow mark on the new bypass pipe, *DO NOT* use this mark as an installation guide.**

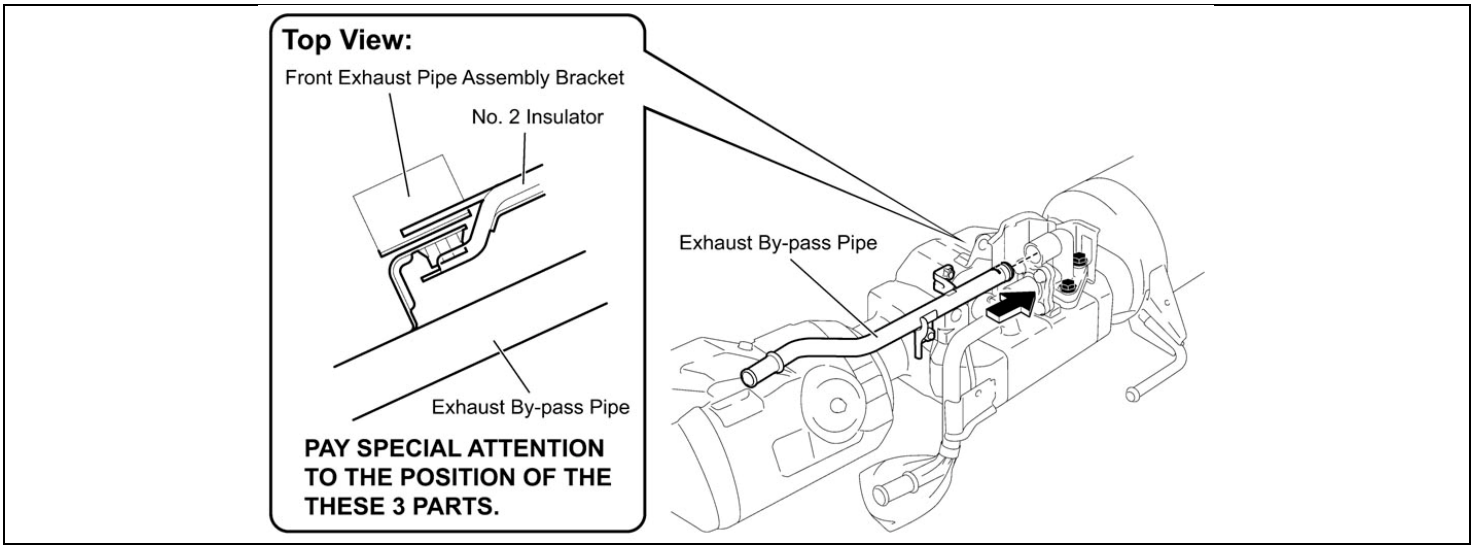

THE FOLLOWING STEPS ARE VITAL. CONFIRM THESE STEPS ARE FOLLOWED CLOSELY IF THESE STEPS ARE NOT FOLLOWED A COOLANT LEAK COULD DEVELOP.

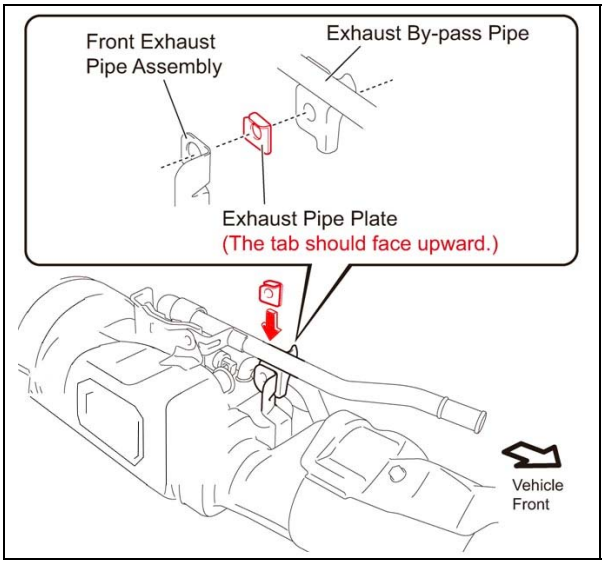

10. TEMPORARILY INSTALL THE BYPASS PIPE

a) Insert the ***NEW*** exhaust pipe plate between the bypass pipe bracket and exhaust bracket that is positioned towards the front of the vehicle.

STOP **Confirm the plate is installed in the correct direction, with the tab facing upward.**

b) Loosely install 2 ***NEW*** black bolts.

c) While pressing down on the newly installed exhaust pipe plate tighten the bolt.

d) While pressing down on the newly installed No.2 insulator tighten the bolt.

Torque: 75in.lbf (8.5N·m)

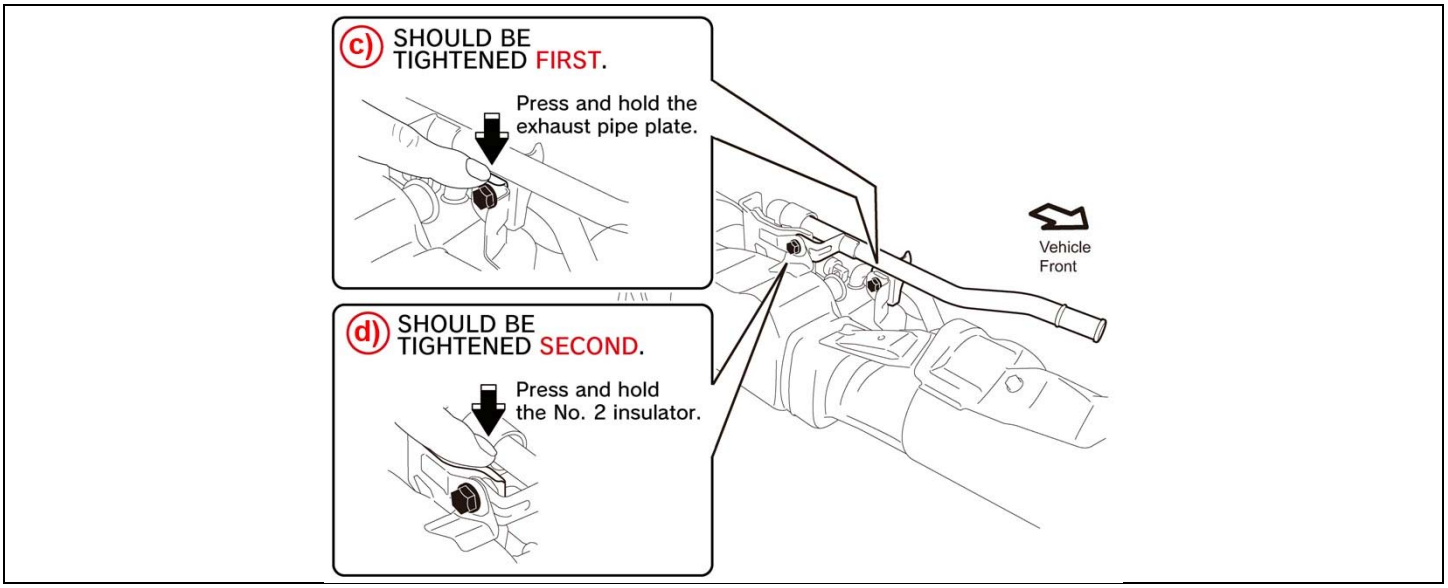

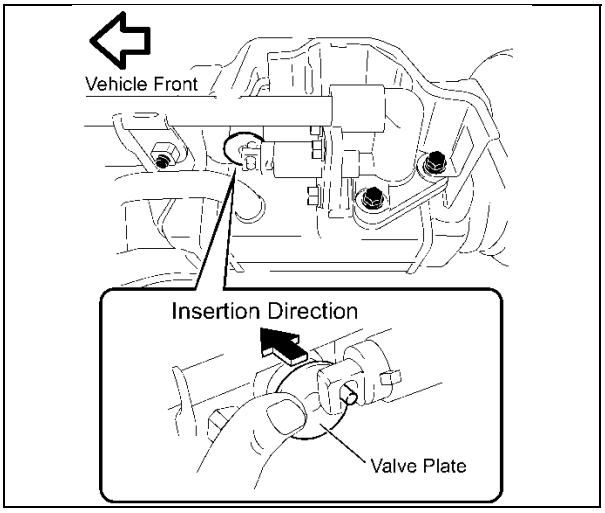

11. INSTALL THE EXHAUST GAS CONTROL ACTUATOR

a) Confirm the valve plate is positioned correctly by pressing the plate.

NOTE: If the valve plate is not positioned correctly, the final actuator position may be difficult to achieve.

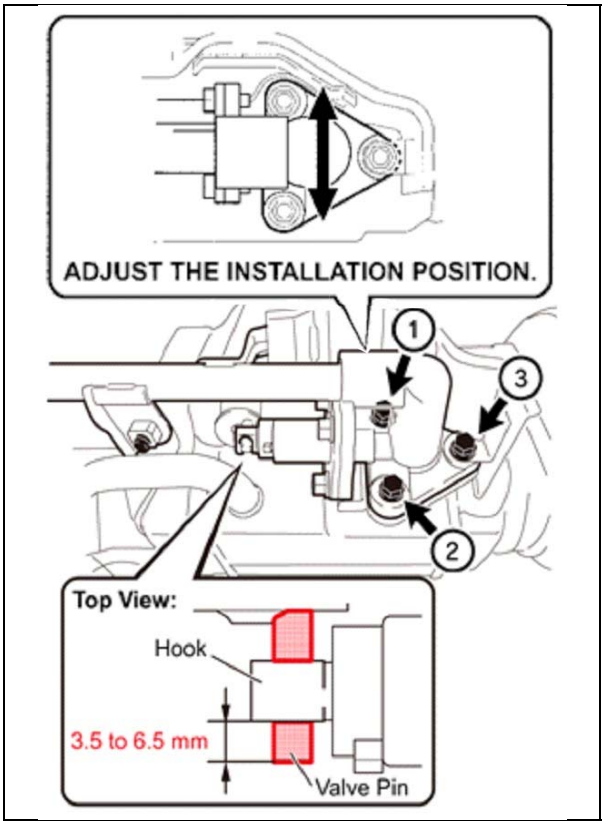

b) Position the actuator so that approximately 4.5mm of the valve pin is protruding past the actuator hook.

c) Tighten the 3 bolts evenly following the torque sequence shown in the illustration.

Torque: 44 in.lbf (5.0N·m)

d) Measure the length of the valve pin that protrudes beyond the actuator hook.

Specification: 3.5 – 6.5mm

STOP **If the protruding pin length is not within specification, the 3 actuator bolts *MUST* be loosened and *ALL* of STEP 11 *MUST* be repeated.**

12. SETTLE THE BYPASS PIPE O-RING

a) Loosen the 2 bypass pipe bolts slightly. ***DO NOT*** remove the bolts.

b) Move the bypass pipe up and down to properly settle the o-ring.

STOP **If this step is not performed, a coolant leak *WILL* develop.**

a) BEFORE ADJUSTMENT

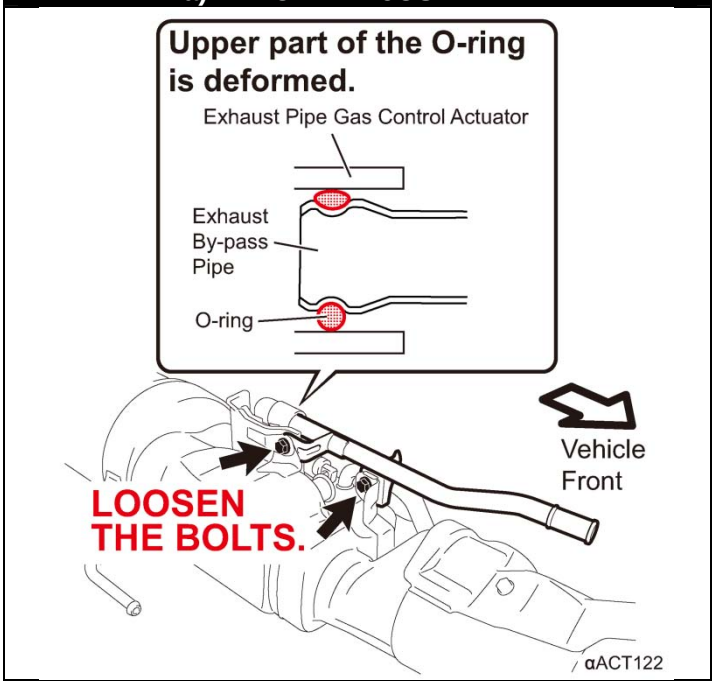

b) AFTER ADJUSTMENT

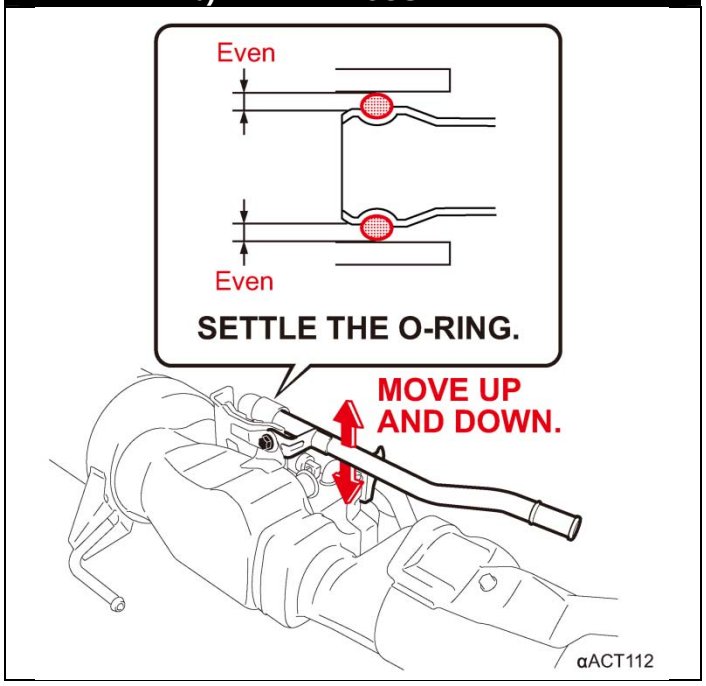

13. TIGHTEN THE BYPASS PIPE BOLTS

- ***DO NOT* press down on the bypass pipe when tightening the bolts, this may cause a coolant leak.**
- **It is critical that step a) be performed before b), if these steps are completed in the incorrect order a coolant leak may develop.**

a) While pressing down on the newly installed exhaust pipe plate tighten the bolt.

b) While pressing down on the newly installed No.2 insulator tighten the bolt.

Torque: 75in.lbf (8.5N·m)

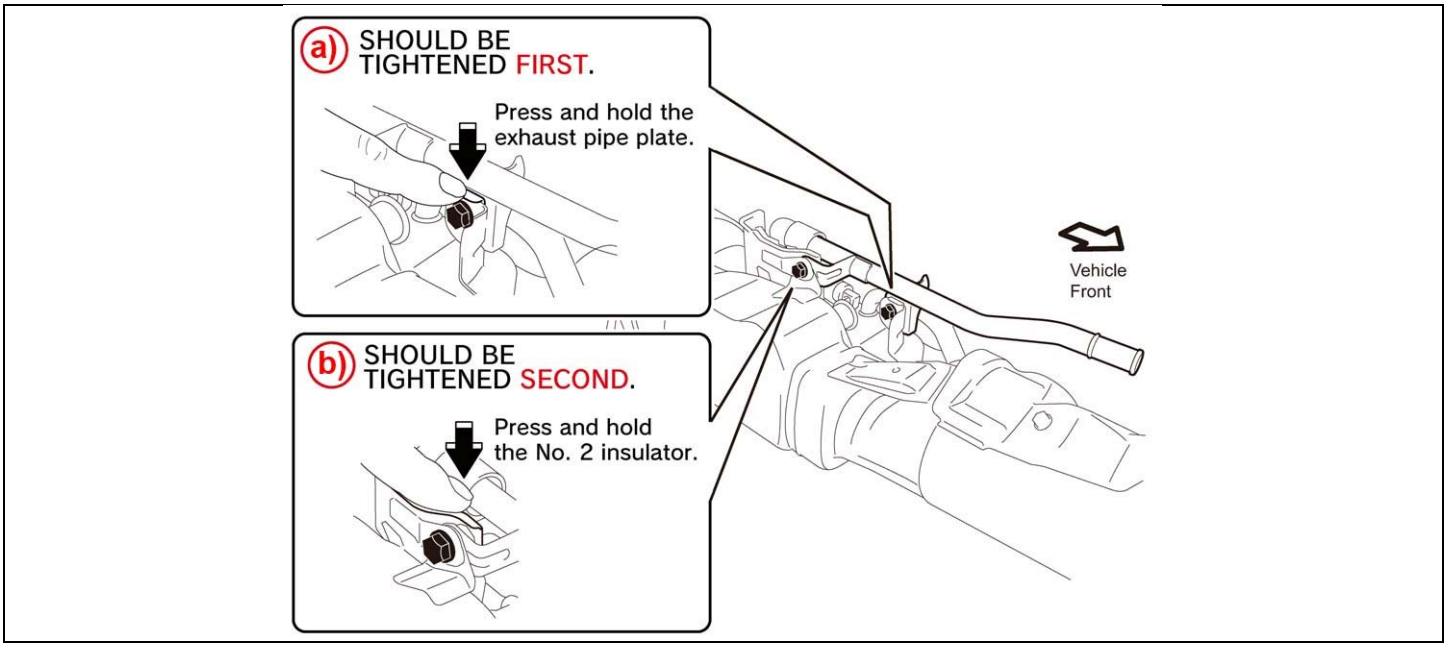

14. REMOVE THE SPACER

a) Remove the spacer from the actuator.

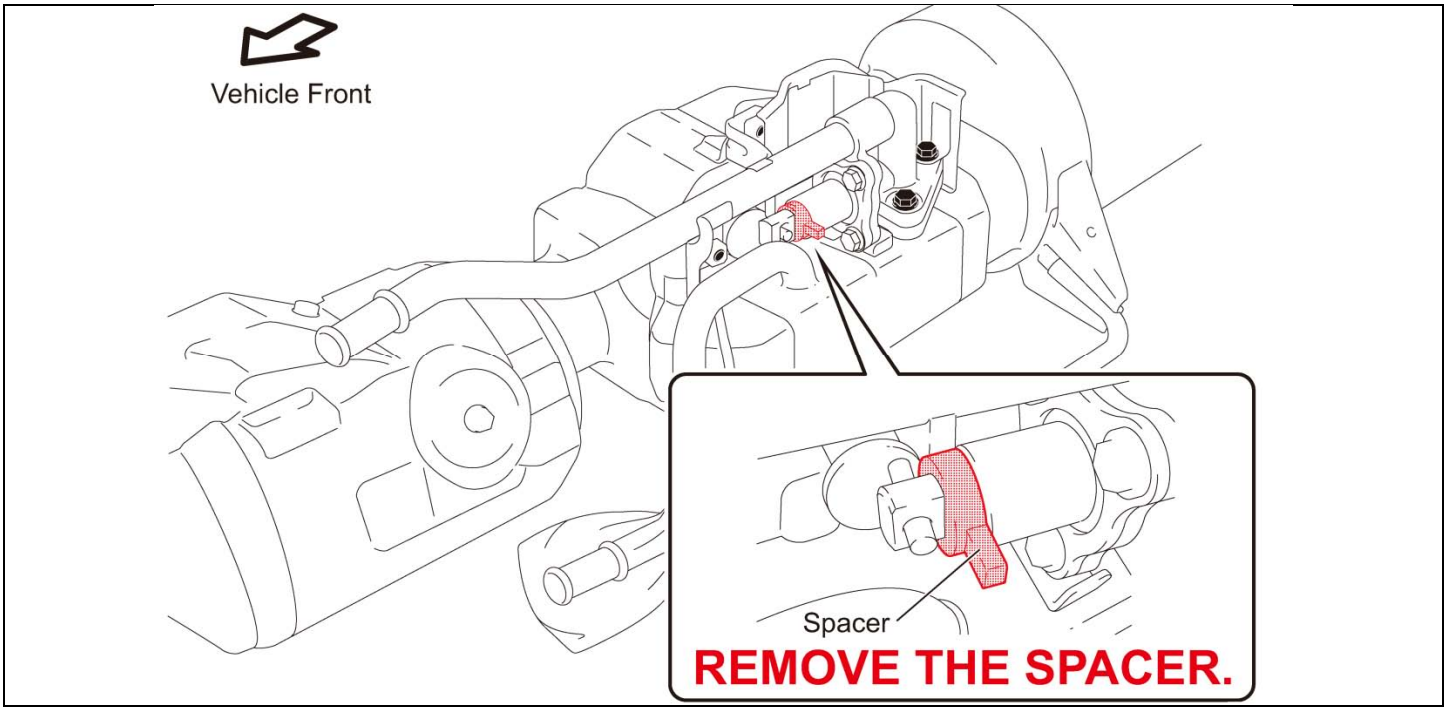

D. FRONT EXHAUST PIPE ASSEMBLY INSTALLATION

1. INSTALL THE FRONT EXHAUST PIPE ASSEMBLY

a) Refer to TIS for instructions on **front exhaust pipe assembly installation.**

STOP

- **Confirm the *NEW* exhaust pipe gaskets included in the parts kit are used.**
- **Confirm the coolant drained from the radiator is reused.**
- **Confirm the coolant is filled and the system is properly bled.**

2. INSPECT THE OPERATION OF THE EXHAUST GAS CONTROL ACTUATOR

a) Place the vehicle in 'Inspection Mode' and warm the engine to normal operating temperature.

b) Confirm the hook of the actuator is fully extended.

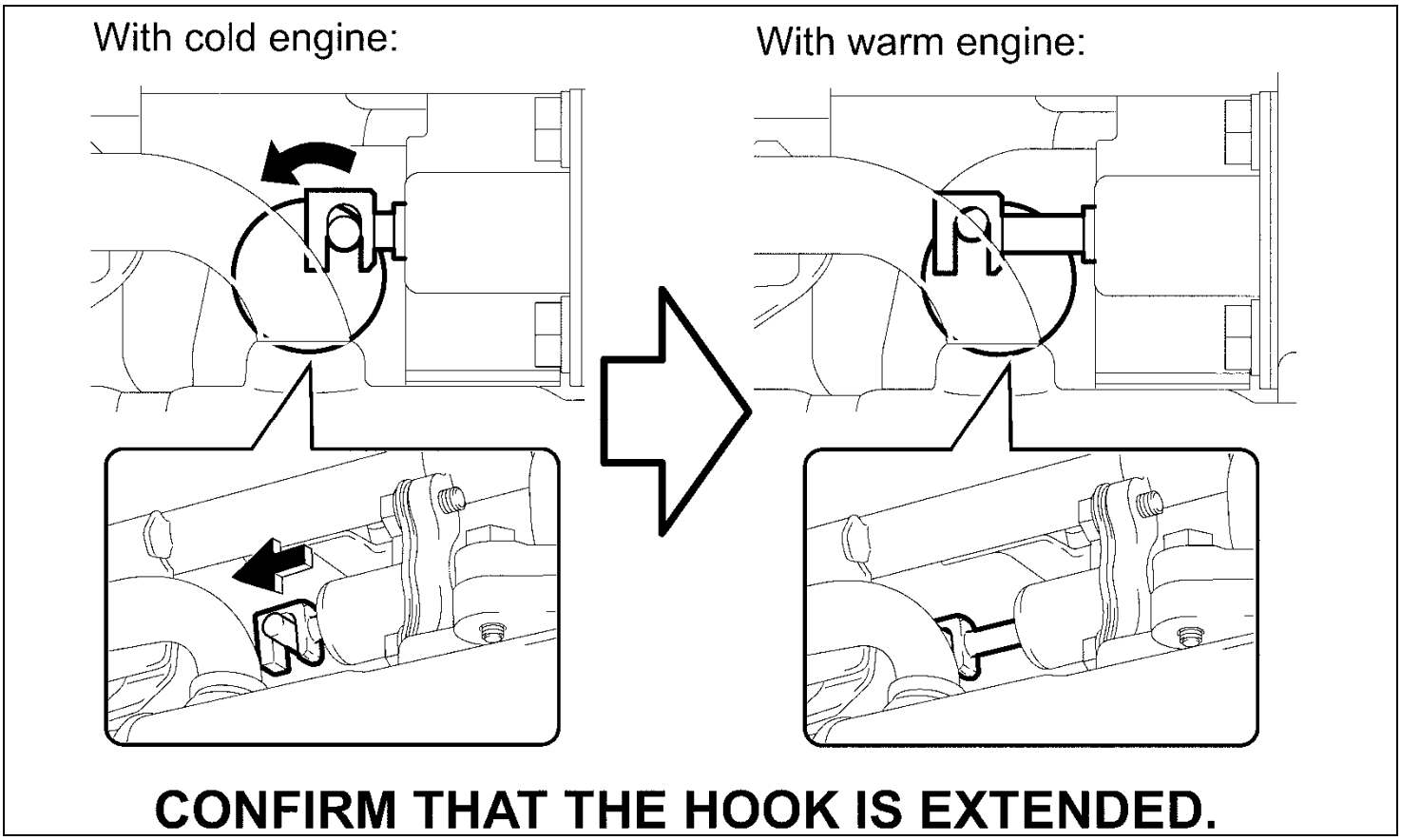

3. CHECK FOR DTCs

◄ VERIFY REPAIR QUALITY ►

- **Confirm the coolant is drained from the radiator using a clean container as this coolant *MUST* be reused**
- **Confirm the new actuator and bypass pipe are installed and aligned correctly**
- **Confirm the cooling system is refilled and bled correctly**
- **Confirm the actuator is working correctly by following the inspection in these instructions**

If you have any questions regarding this campaign, please contact your regional representative

VI. APPENDIX

A. CAMPAIGN DESIGNATION DECODER

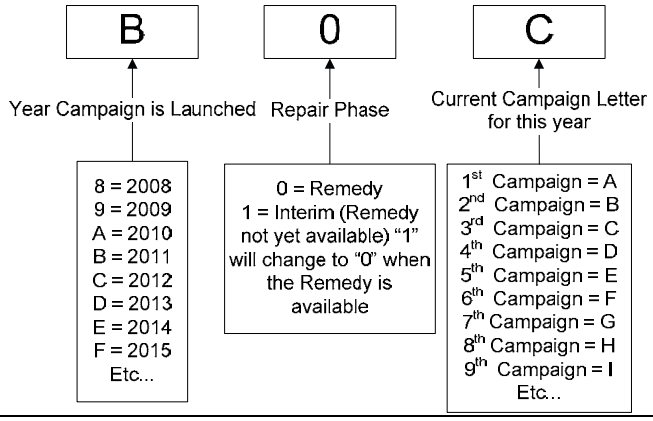

Examples:
A0D = Launched in 2010, Remedy Phase, 4th Campaign Launched in 2010
B1E = Launched in 2011, Interim Phase, 5rd Campaign Launched in 2011
C1C = Launched in 2012, Interim Phase, 3rd Campaign Launched in 2012

B. CAMPAIGN PARTS DISPOSAL

As required by Federal Regulations, please make sure all campaign parts (original parts) removed from the vehicle are disposed of in a manner in which they will not be reused, ***unless requested for parts recovery return.***